612–1

Pin Header 1.27mm x1.27mm Board Spacer Box Type

Technical Data :

Insulator Material:	High Temperature Thermoplastic,UL 94V–0.
Contact :	0.40x0.40mm
Contact Material:	copper alloy
Plating:	Au or Sn over Nickel
Current Rating :	1 Amp
Insulator resistance :	500 Megohms min
Dielectric withstanding :	AC 500V for 1 Minute
Operating Temperature:	–40 ℃ to +105 ℃ .
Max. processing Temp:	230 ℃ for 30–60 seconds. 260 ℃ for 10 seconds.
Mates with :	134,IDC Socket

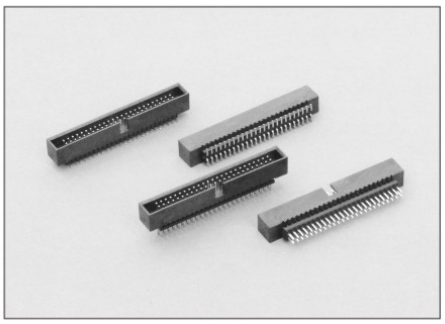

RoHS Compliant

Profile 5.4mm Straight Type

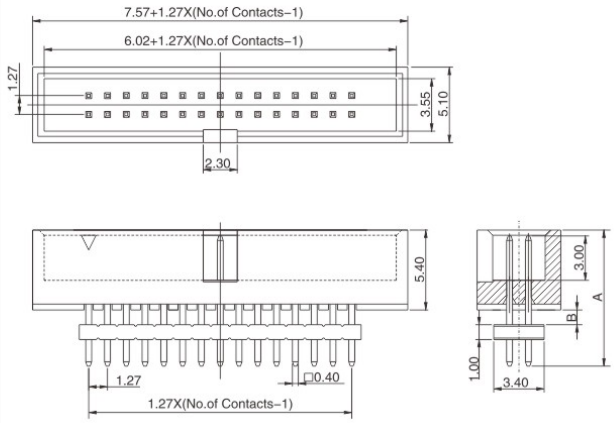

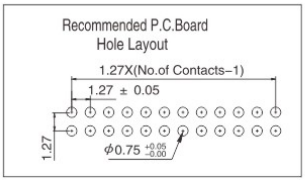

Profile 5.4mm SMT Type

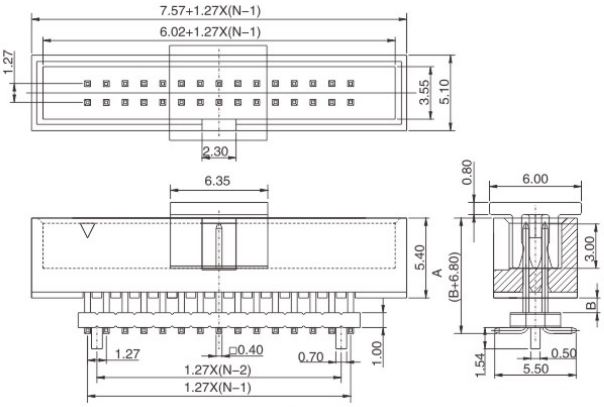

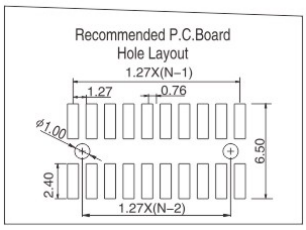

How to order

6	1	2	–	1	–	☐	☐	☐	–	☐	–	☐	☐	–	☐	☐	–	☐	–	☐	☐
Serie–Nr.						Nr.of Contact. Type				Connector		Dimension			Plating			Cap		Packing	Location Peg

Nr. of Contact	Code
010–100	010–100

Connector Type	Code
Straight Type	1
SMT Type	2

Dimensions(Straight)		Code
A	B	
9.2	1.0	10
10.5	1.0	20
as request		XX
Eg.A=15.0 B=2.4 Code Nr.=15.0/2.4		

Dimensions(SMT)	Code
B	
1.0	10
1.5	20
as request	XX
Eg. B=2.4 Code Nr.=2.4	

Pick & Place Cap	Code
W/ Cap	1
W/O Cap	2
For SMT Type only	

Plating option	Code
Full gold flash plated	10
Tin plated	50
Selective gold flash plated	60
10u"Selective gold plated	610
15u"Selective gold plated	615
20u"Selective gold plated	620
30u"Selective gold plated	630

Packing Option	Code
Tube	1
Tape & Reel	2

Location Peg	Code
W/ Location Peg	10
W/O Location Peg	00
Only for SMT Type	

W.E.